– INSTRUCTION MANUAL –

REY TABLES

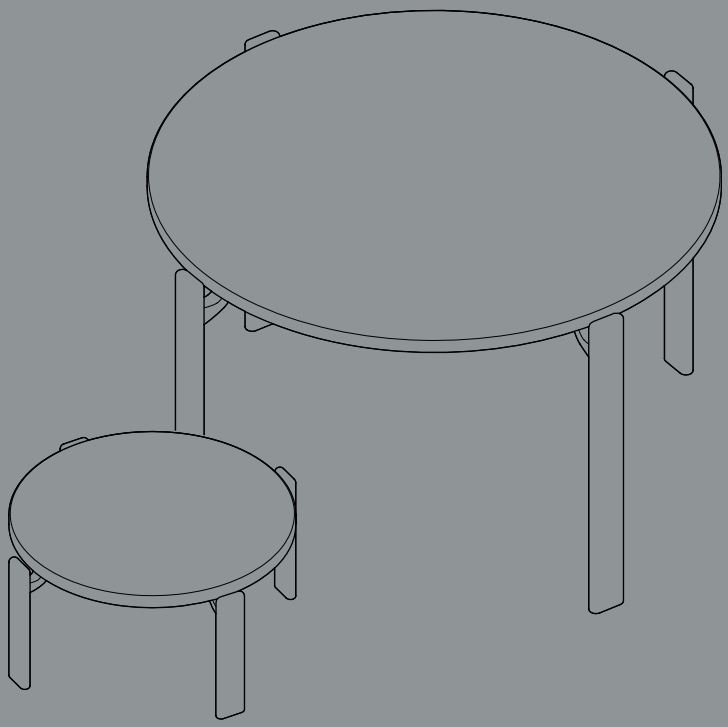

DESIGN BY BRUNO REY

HAY

– PARTS –

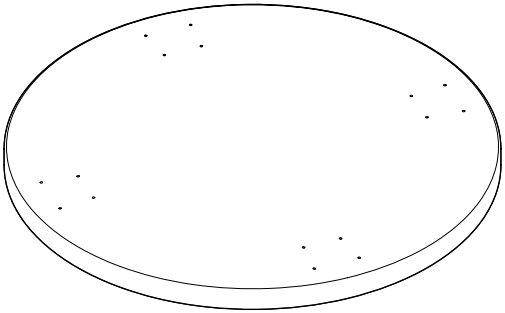

A Tabletop x1

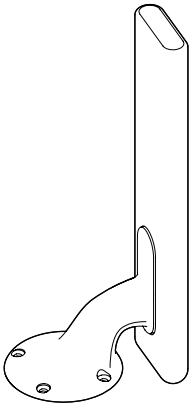

B Legs x4

C Screws
Table x26
Coffee Table x20

Protect the tabletop from scratches and other damage while assembling.

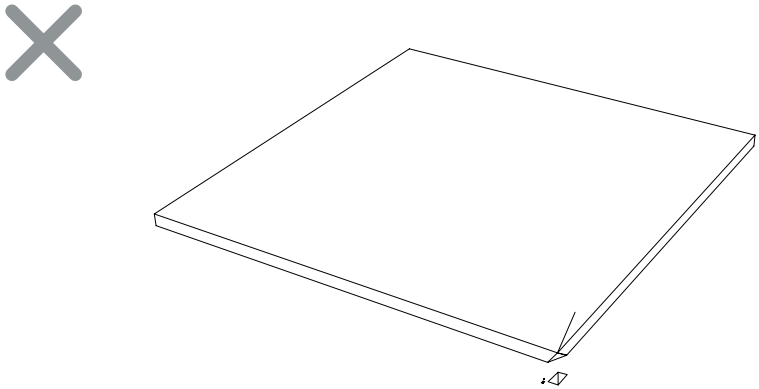

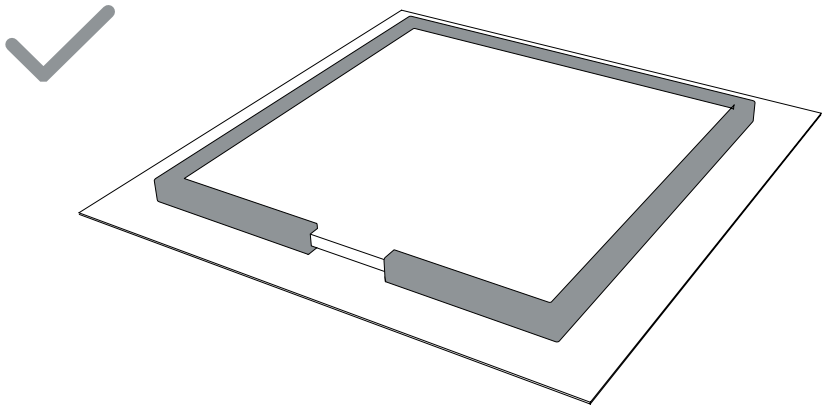

1.

Mount the legs B onto the tabletop A with screws C.
Make sure the screws go in the pre-drilled holes in the table top.
Illustrated below is the Coffee Table, which uses 4 screws for each leg.
The Table uses 5 screws for each leg.

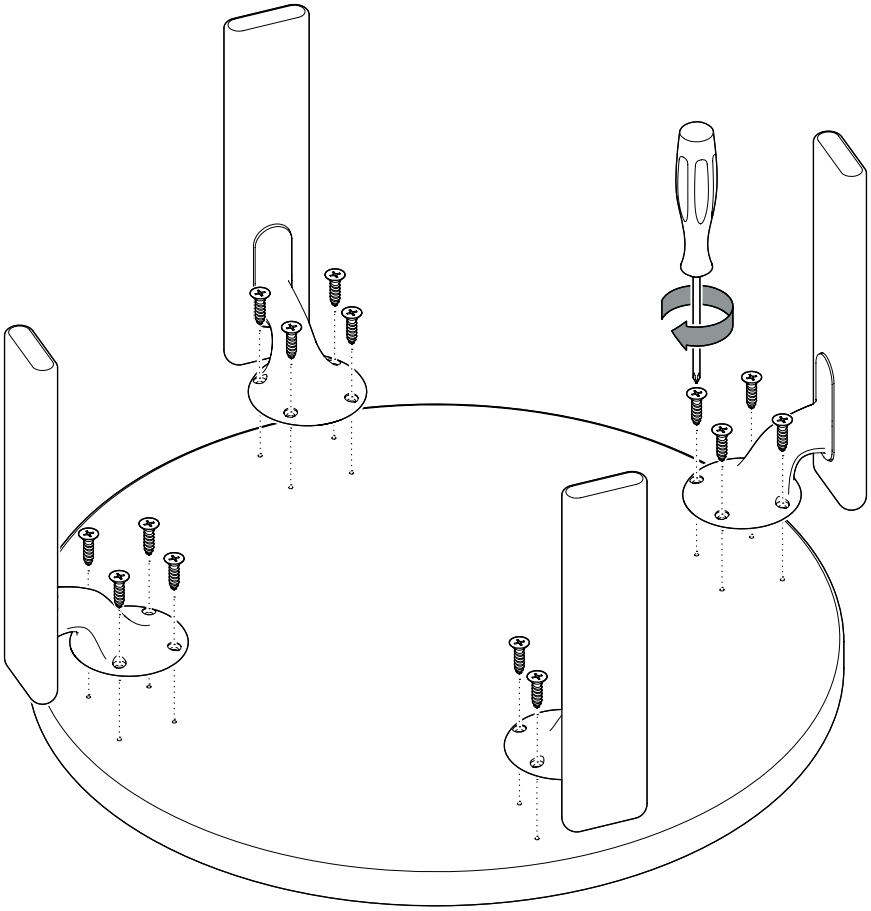

2.

Done!

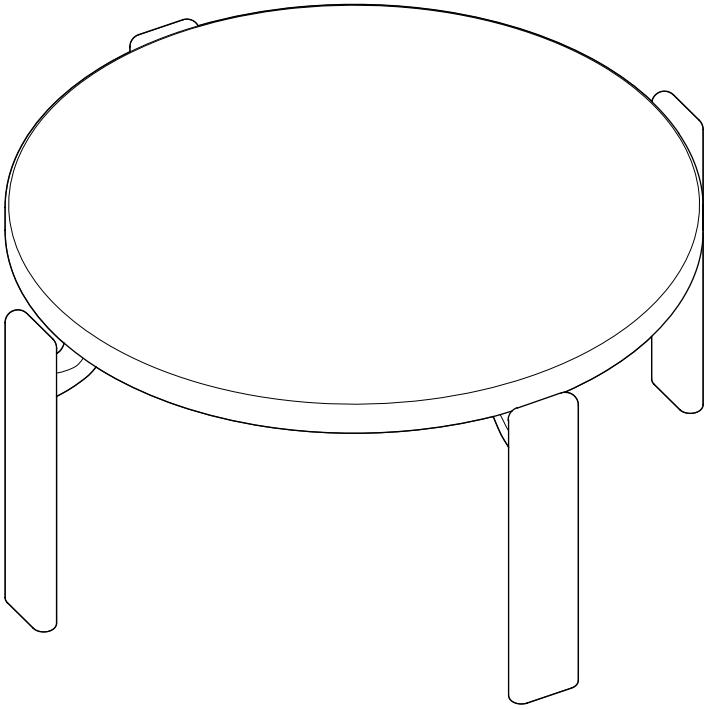

– CARE & MAINTENANCE –

Our Care & Maintenance offers guidance for optimal maintenance of your HAY product. It includes advice and instructions on cleaning and caring for specific materials to prolong the life of your furniture.

Please find our Care & Maintenance guide by scanning the QR code

You can find more relevant information on Rey Table by scanning the QR code

You can also find the same information here hay.dk/downloads

Havnen 1 8700 Horsens Denmark
+45 4282 0282 / hay@hay.com

HAY

10/12/2021