– INSTRUCTION MANUAL –

BALCONY TABLE

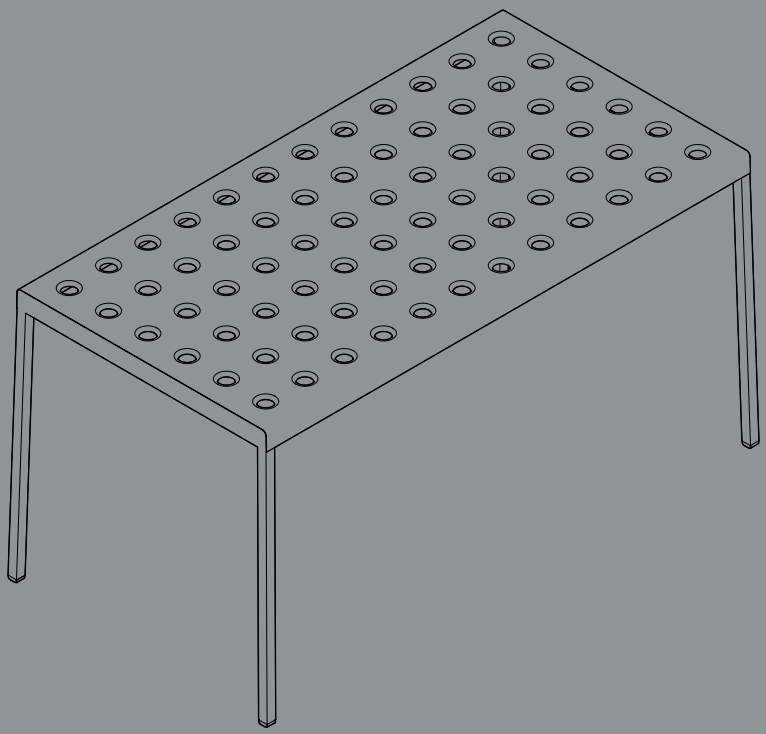

DESIGN BY RONAN & ERWAN BOUROULLEC

HAY

– PARTS –

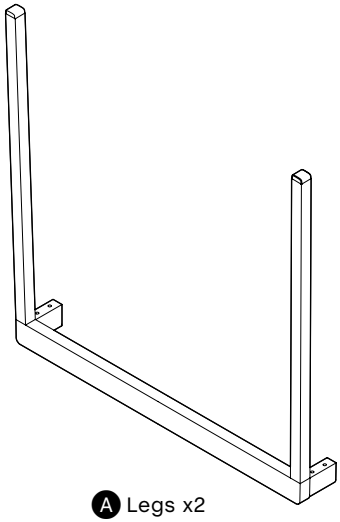

A Legs x2

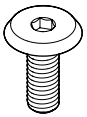

B Screws x8

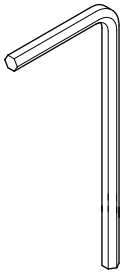

C Allen key x1

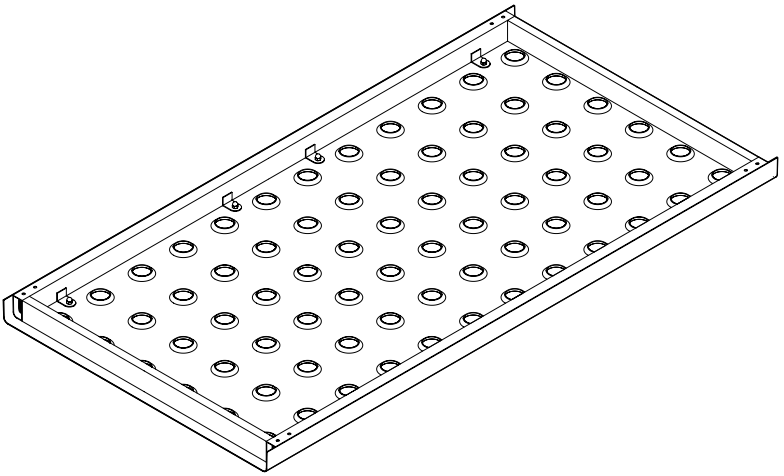

D Tabletop x1

1.

Insert legs A into the tabletop D.

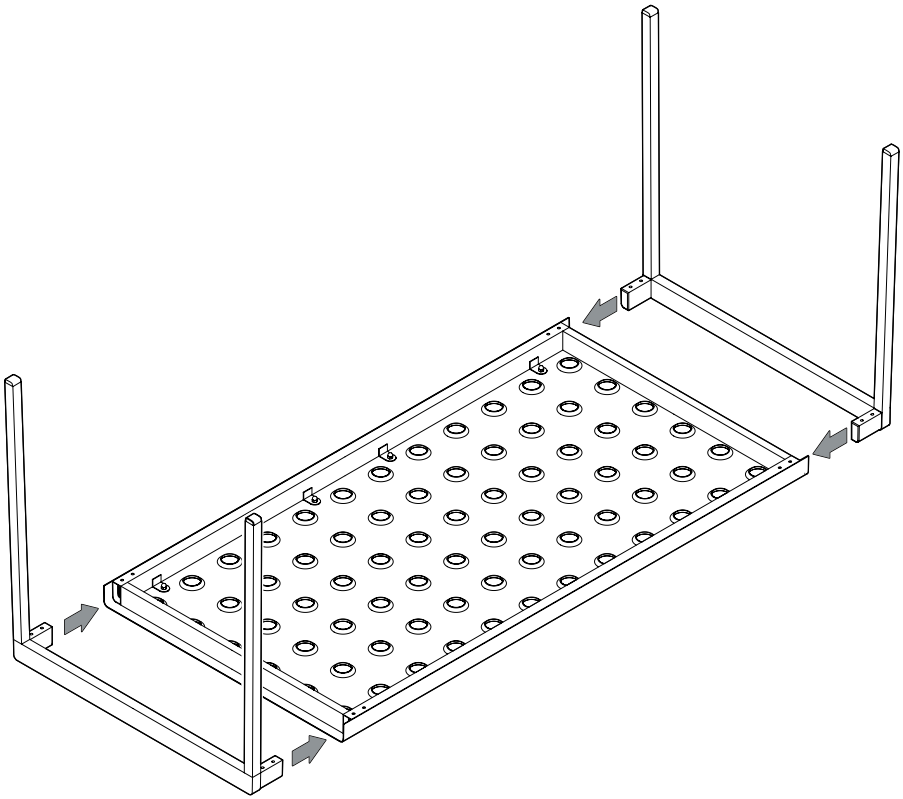

2.

Secure the legs with screws B and Allen key C.
Tighten all screws lightly before tightening them all completely.

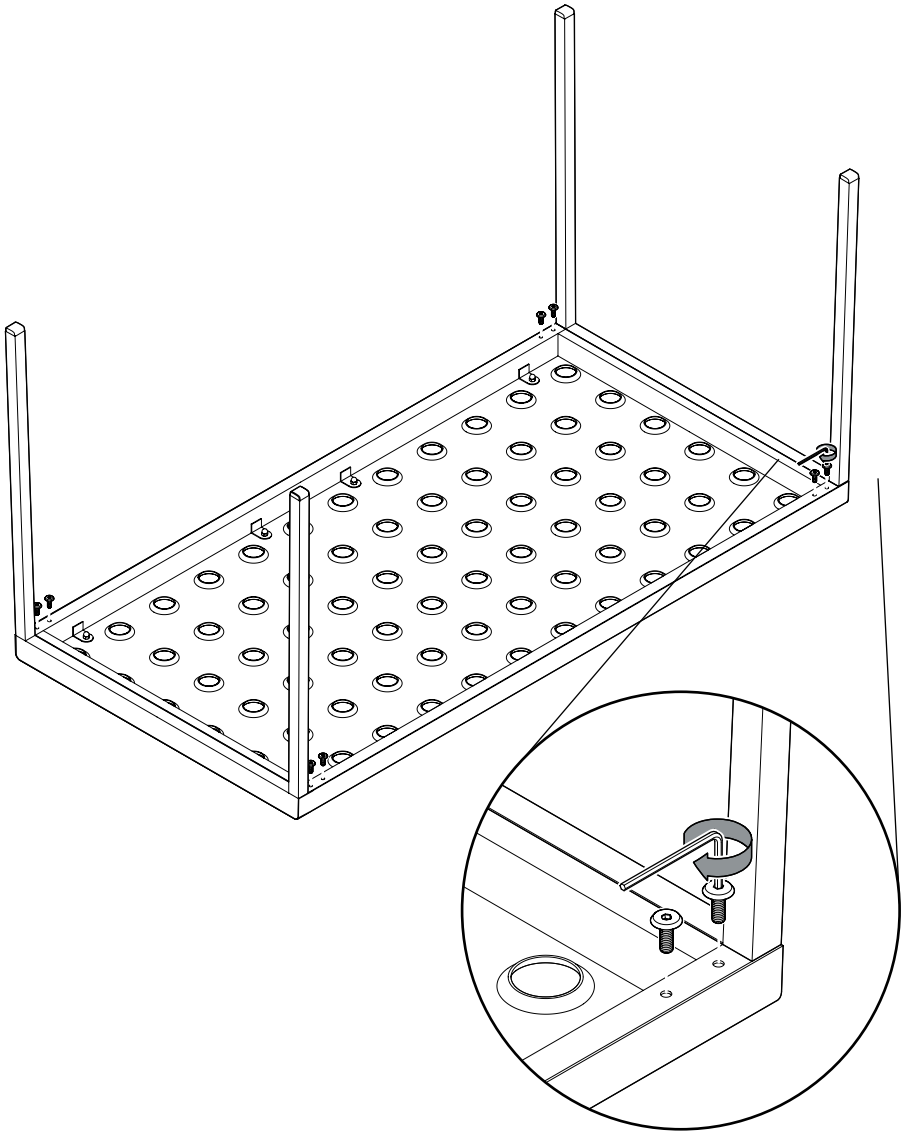

3.

Done!

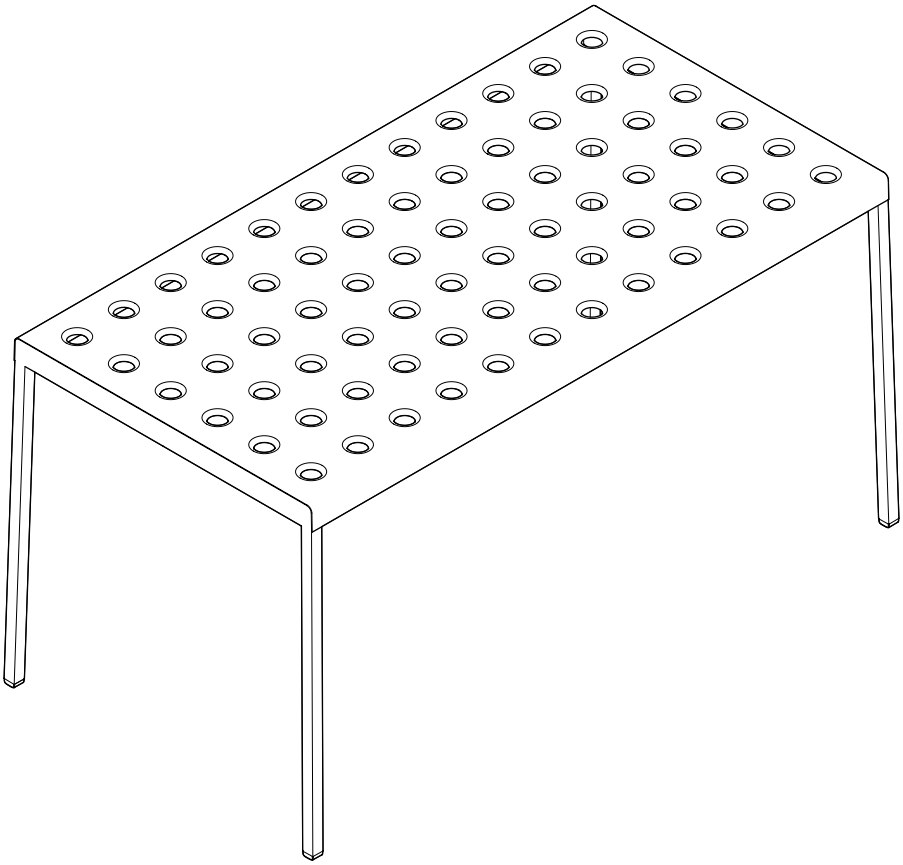

Our Care & Maintenance offers guidance for optimal maintenance of your HAY product. It includes advice and instructions on cleaning and caring for specific materials to prolong the life of your furniture.

Please find our Care & Maintenance guide by scanning the QR code

You can find more relevant information on Balcony Table by scanning the QR code

You can also find the same information here hay.dk/downloads

Havnen 1 8700 Horsens Denmark
+45 4282 0282 / hay@hay.com

www.hay.com

HAY

22/12/2021